A112 单-10 robinia st frankston/Kitchen & Pantry & Rundry

BENSON

DESIGN FIRM
Benson Cabinetry (Foshan) Co., Ltd.

This drawing is copyright
Contractors shall work from figured dimensions only
Contractors must check all dimensions on site
Contractors must be reported immediately to architects

Customer Signature

Project incharge signature

Approved by

Date:

A112 单-10 robinia st frankston/Kitchen & Pantry & Rundry

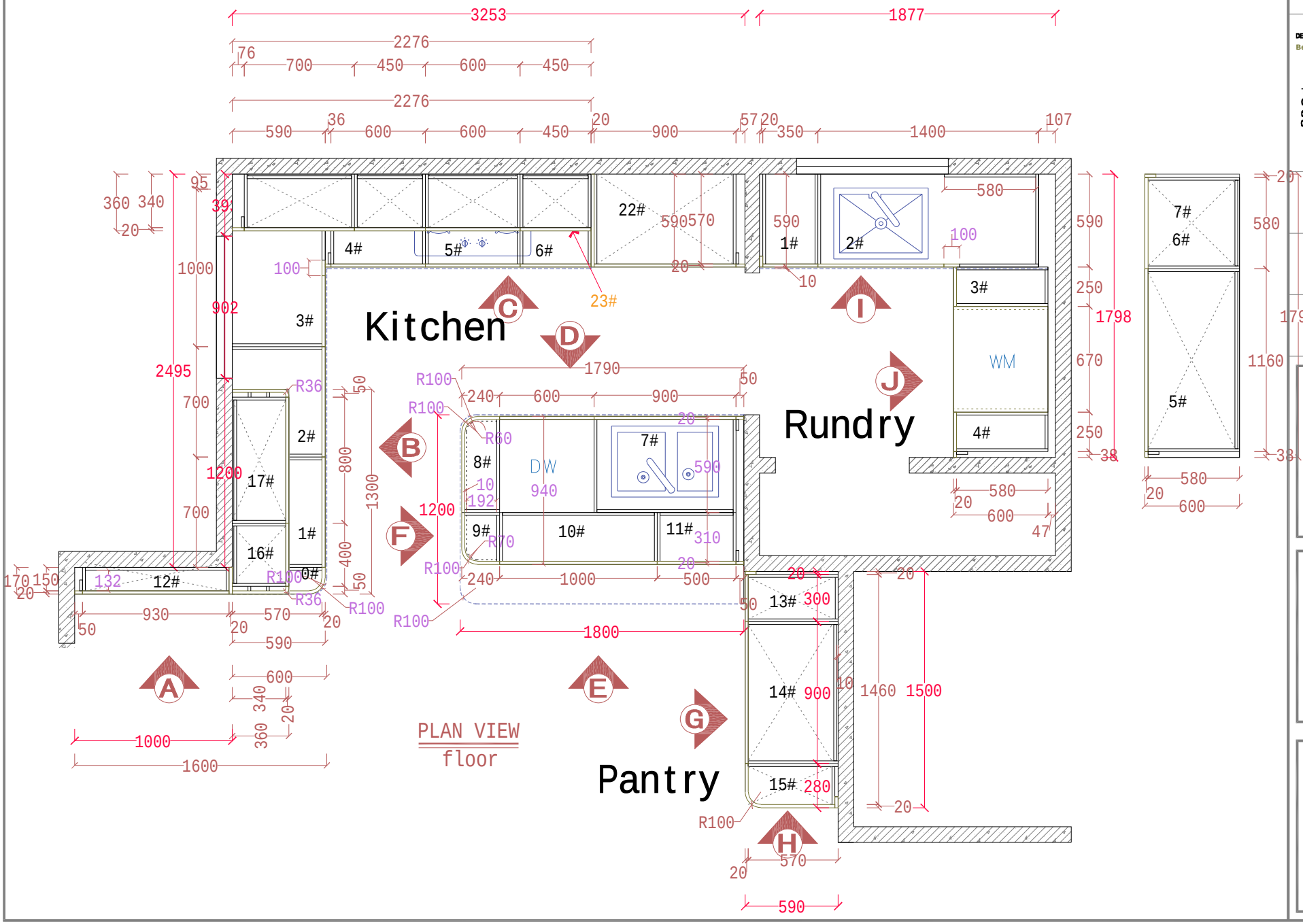

BENSON

DESIGN FIRM
Benson Cabinetry (Foshan) Co., Ltd.

This drawing is copyright
Contractors shall work from figured dimensions only
Contractors must check all dimensions on site
Contractors must be reported immediately to architects

Customer Signature

Project incharge signature

Approved by

Date:

A112 单-10 robinia st frankston/Kitchen & Pantry & Rundry

Material

Door1 : GM5028 林间小溪

Carcass1 :GM5028 林间小溪

Stone : 20mm零硅石英石（8105）

Led : 3000k 吊柜：靠后100mm 手扫开关　高柜：靠前100mm 门控开关

Handle :Aluminum(black) 注意也有明装拉手

Toe Kick:木板踢脚线（同门板色）

DRW&HNG :Blum soft close 骑马抽

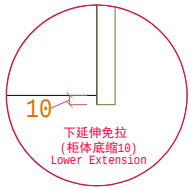

（下层）吊柜免拉手工艺

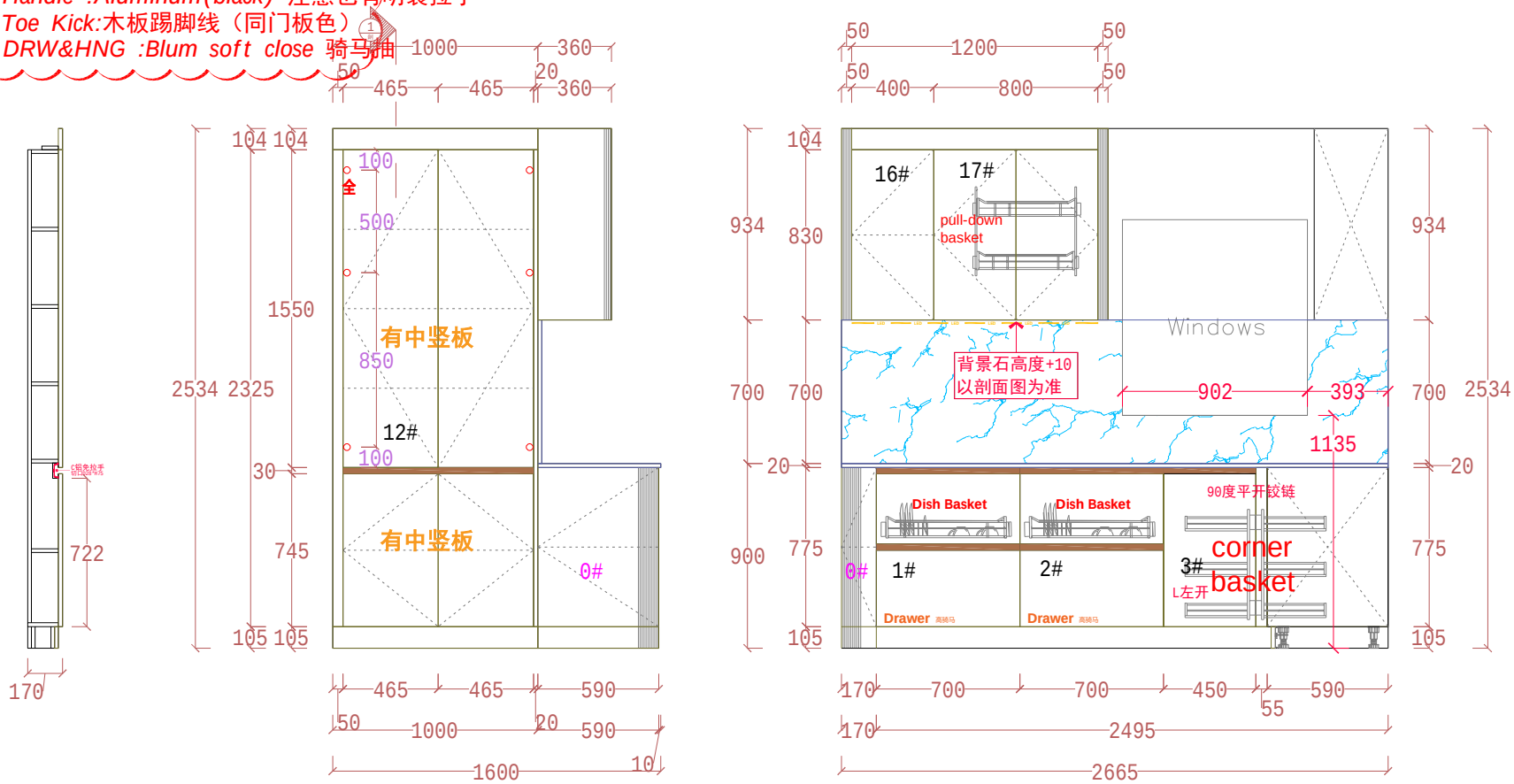

SECTION VIEW 1　　ELEVATION A　　ELEVATION B

BENSON

DESIGN FIRM
Benson Cabinetry (Foshan) Co., Ltd.

This drawing is copyright
Contractors shall work from figured dimensions only
Contractors must check all dimensions on site
Contractors must be reported immediately to architects

Customer Signature

Project incharge signature

Approved by

Date:

A112 单-10 robinia st frankston/Kitchen & Pantry & Rundry

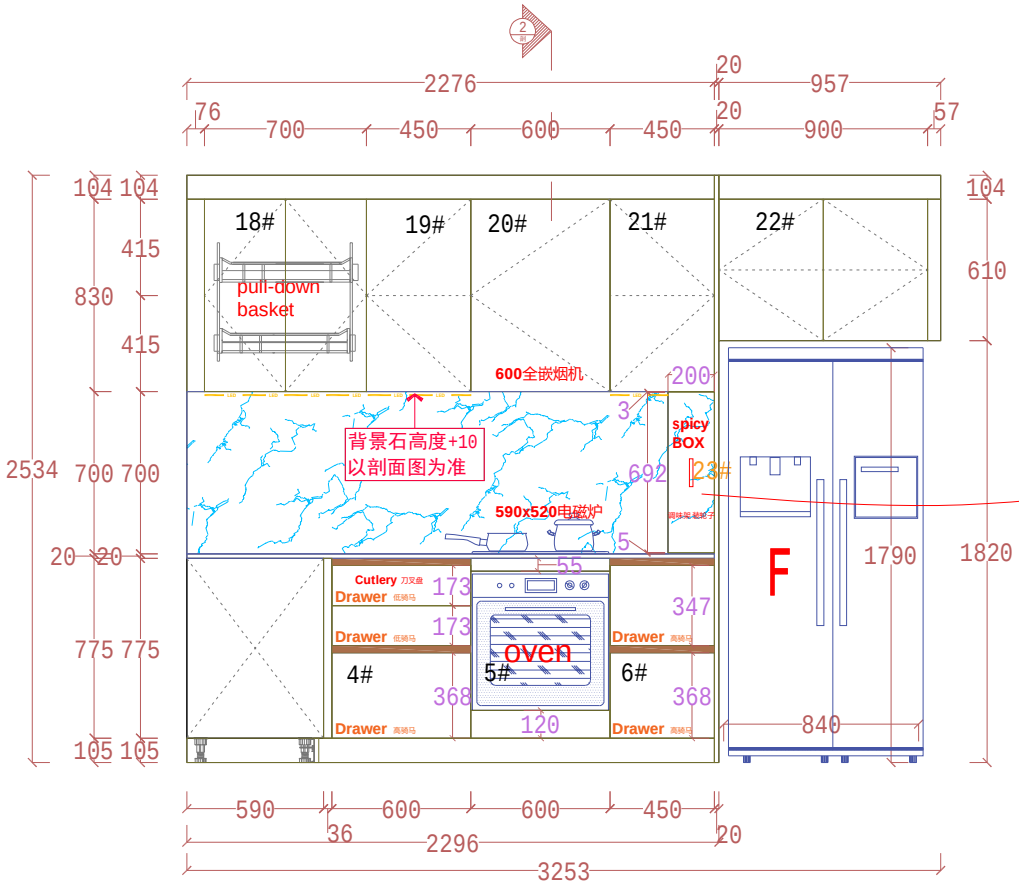

ELEVATION C

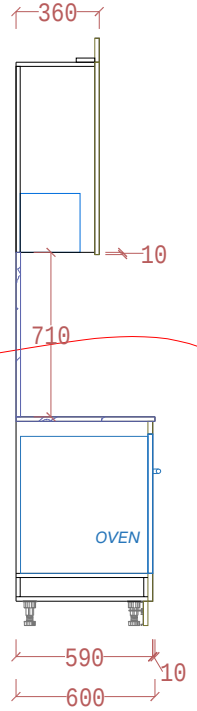

SECTION VIEW 2

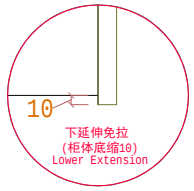

(下层)吊柜免拉手工艺

轮子高度28mm

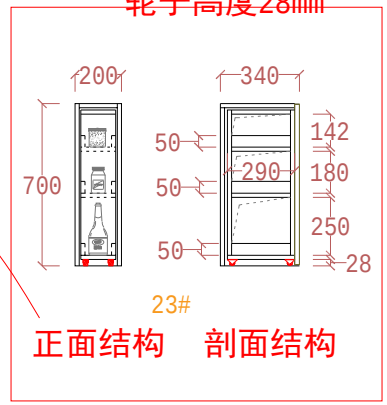

BENSON

DESIGN FIRM
Benson Cabinetry (Foshan) Co., Ltd.

This drawing is copyright
Contractors shall work from figured dimensions only
Contractors must check all dimensions on site
Contractors must be reported immediately to architects

Customer Signature

Project incharge signature

Approved by

Date:

A112 单-10 robinia st frankston/Kitchen & Pantry & Rundry

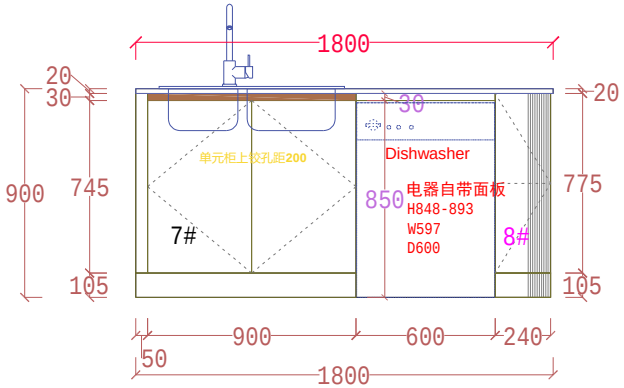

ELEVATION D

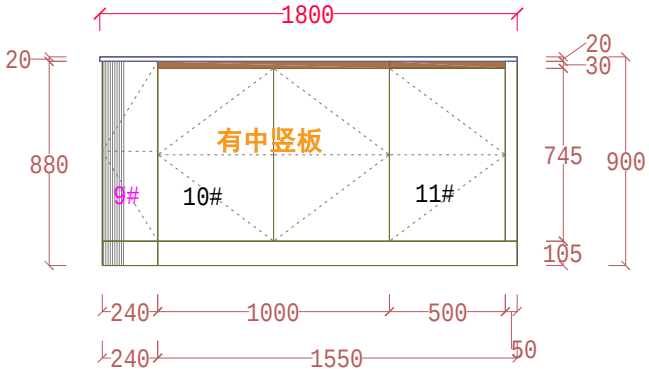

ELEVATION E

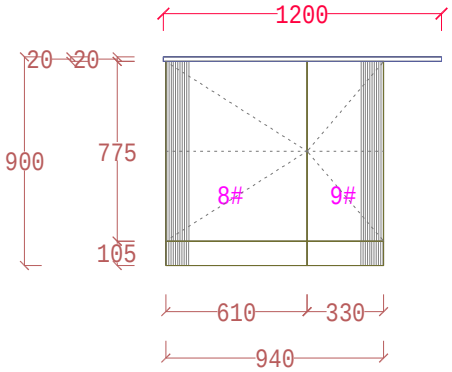

ELEVATION F

BENSON

DESIGN FIRM
Benson Cabinetry (Foshan) Co., Ltd.

This drawing is copyright
Contractors shall work from figured dimensions only
Contractors must check all dimensions on site
Contractors must be reported immediately to architects

Customer Signature

Project incharge signature

Approved by

Date:

A112 单-10 robinia st frankston/Kitchen & Pantry & Rundry

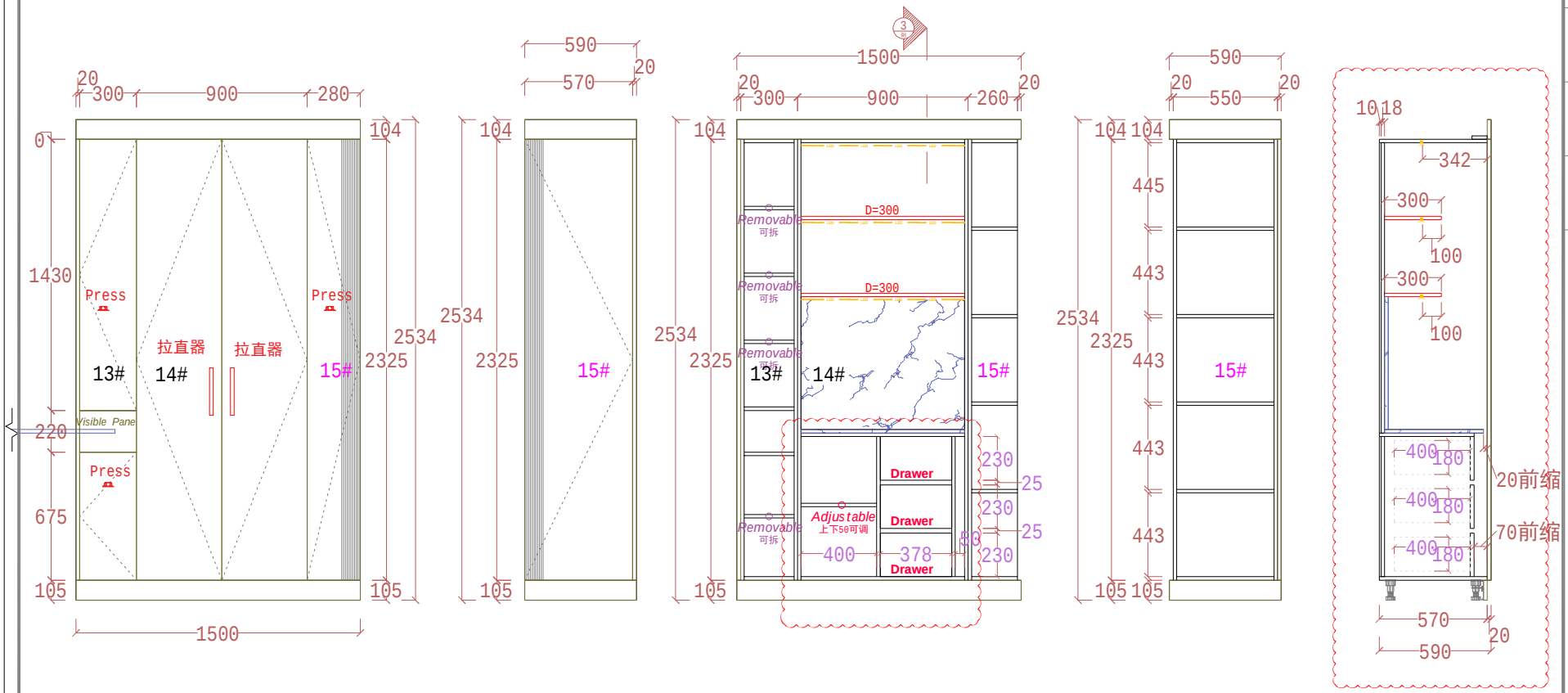

ELEVATION G

ELEVATION H

INNER VIEW G

INNER VIEW H

SECTION VIEW 3

BENSON

DESIGN FIRM
Benson Cabinetry (Foshan) Co., Ltd.

This drawing is copyright
Contractors shall work from figured dimensions only
Contractors must check all dimensions on site
Contractors must be reported immediately to architects

Customer Signature

Project incharge signature

Approved by

Date:

A112 单-10 robinia st frankston/Kitchen & Pantry & Rundry

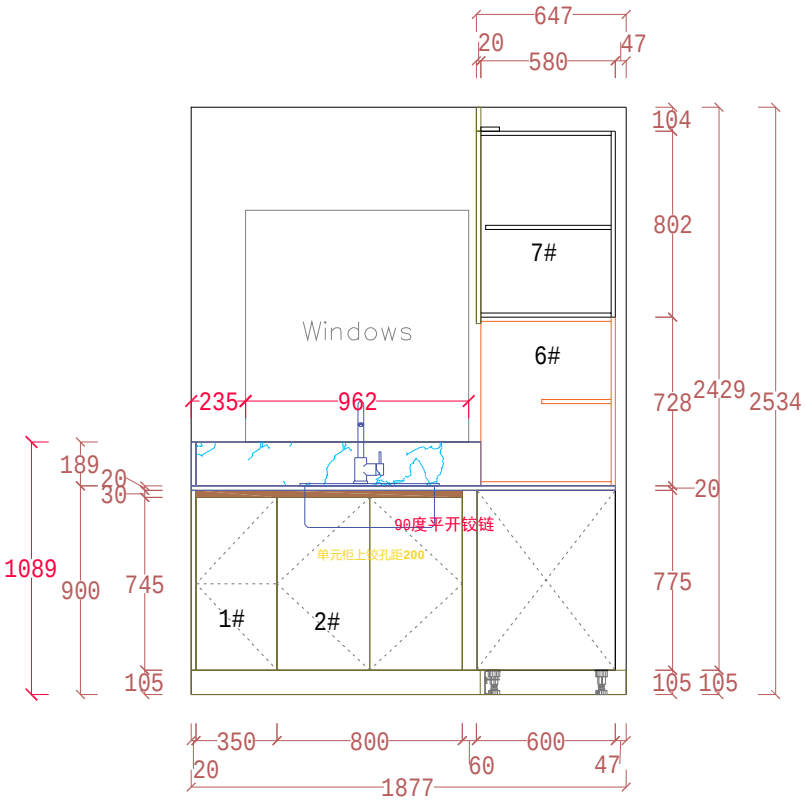

ELEVATION I

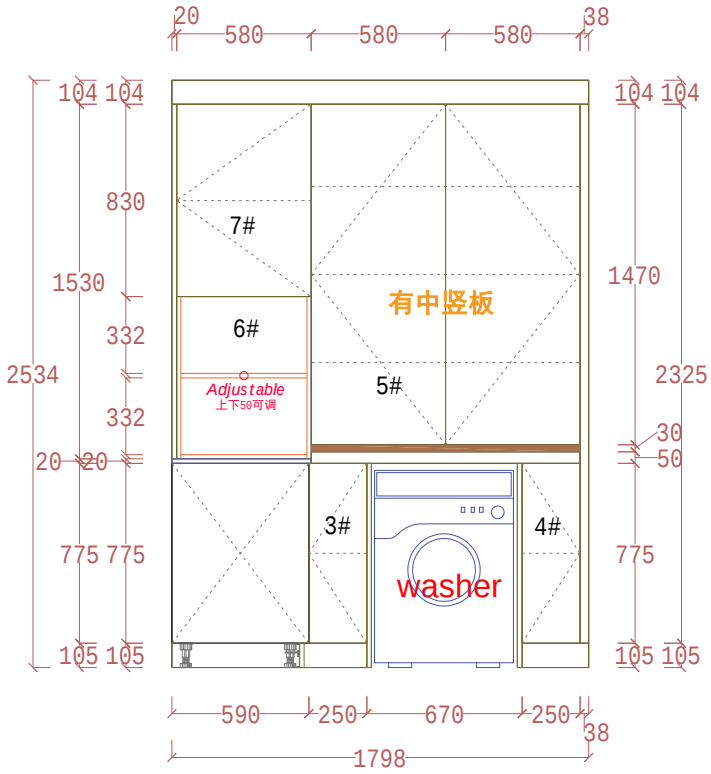

ELEVATION J

BENSON

DESIGN FIRM
Benson Cabinetry (Foshan) Co., Ltd.

This drawing is copyright
Contractors shall work from figured dimensions only
Contractors must check all dimensions on site
Contractors must be reported immediately to architects

Customer Signature

Project incharge signature

Approved by

Date:

A112 单-10 robinia st frankston/Walk-in closet

Material

Carcass1 :GM5028 林间小溪

DRW&HNG :Blum soft close 托底导轨

Led : 3000k 靠前100mm 配触碰开关

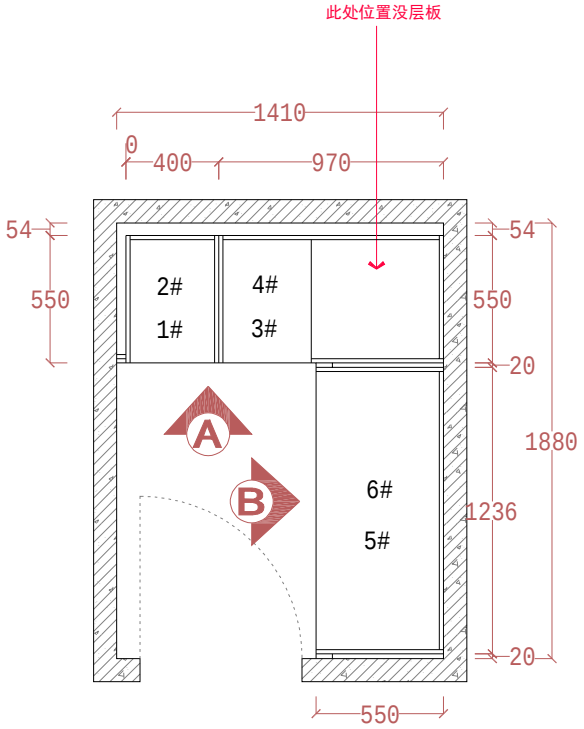

BENSON

DESIGN FIRM
Benson Cabinetry (Foshan) Co., Ltd.

This drawing is copyright
Contractors shall work from figured dimensions only
Contractors must check all dimensions on site
Contractors must be reported immediately to architects

Customer Signature

Project incharge signature

Approved by

Date:

A112 单-10 robinia st frankston/Walk-in closet

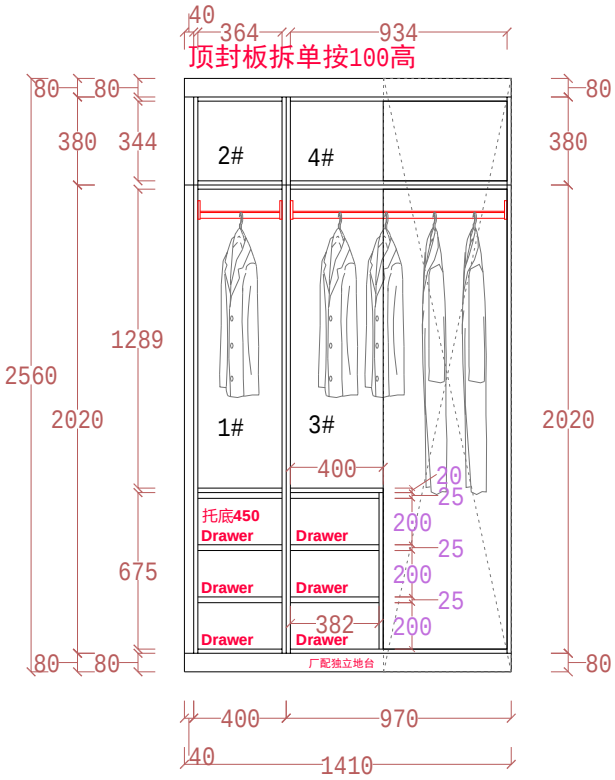

INNER VIEW A

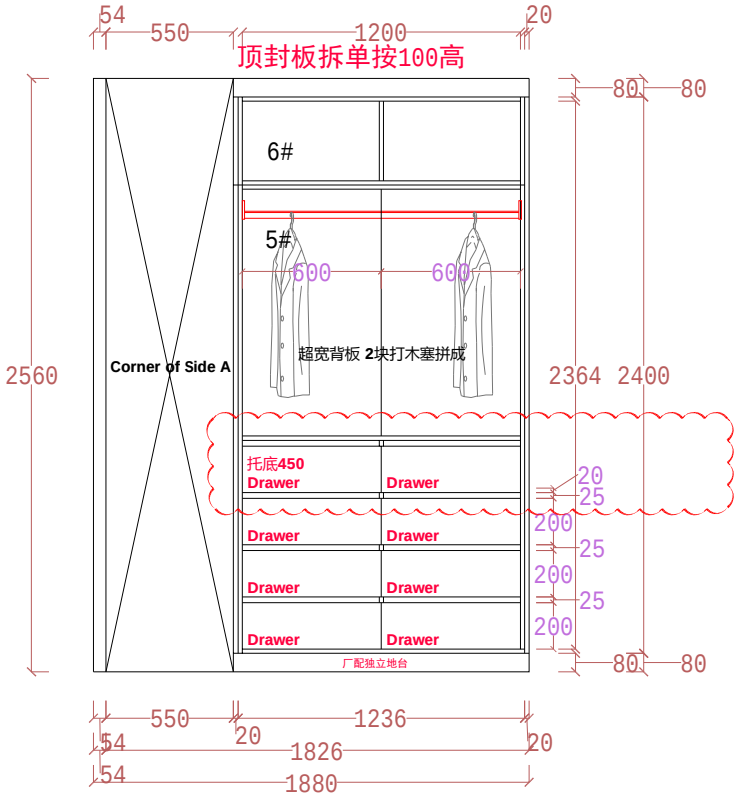

INNER VIEW B

BENSON

DESIGN FIRM
Benson Cabinetry (Foshan) Co., Ltd.

This drawing is copyright
Contractors shall work from figured dimensions only
Contractors must check all dimensions on site
Contractors must be reported immediately to architects

Customer Signature

Project incharge signature

Approved by

Date:

A112 单-10 robinia st frankston/Wardrobe 1

BENSON

DESIGN FIRM
Benson Cabinetry (Foshan) Co., Ltd.

This drawing is copyright
Contractors shall work from figured dimensions only
Contractors must check all dimensions on site
Contractors must be reported immediately to architects

Customer Signature

Project incharge signature

Approved by

Date:

A112 单-10 robinia st frankston/Wardrobe 1

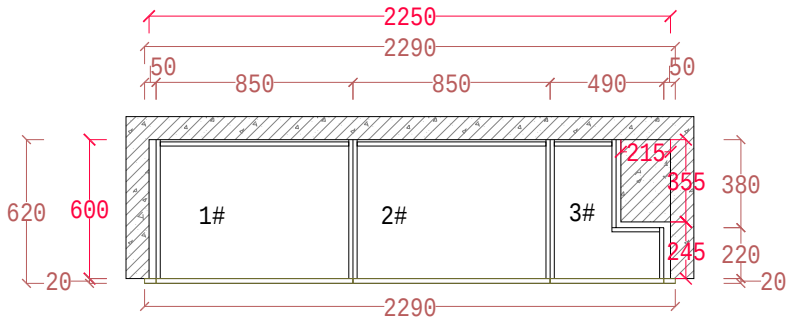

PLAN VIEW
floor

Material

Door1 : GM5028 林间小溪

Carcass1 :GM5028 林间小溪

Handle :木免拉

Toe Kick:同门板

DRW&HNG :Blum soft close 托底导轨

Led : 3000k 靠前100mm 配门控开关

顶封板拆单按100高

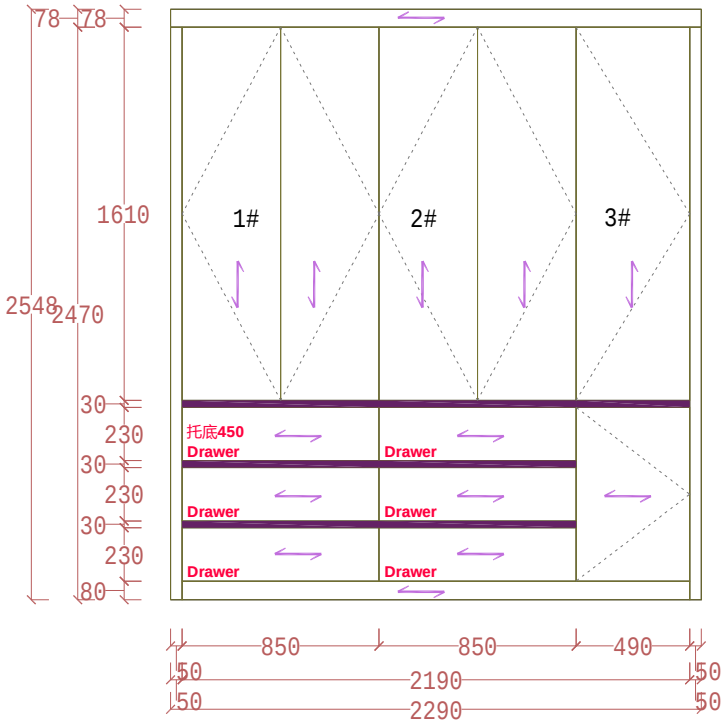

OUTSIDE VIEW

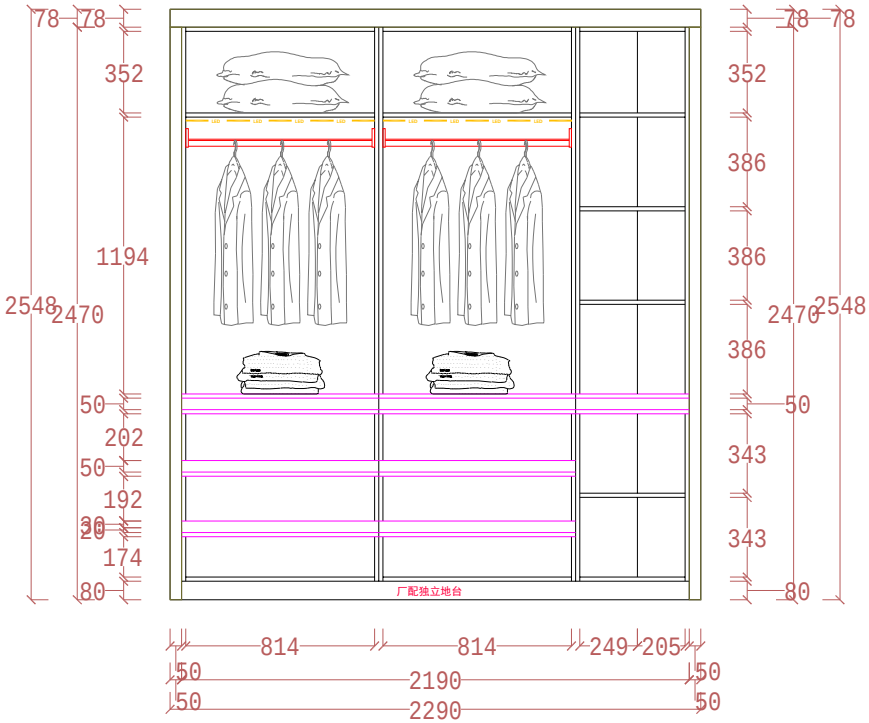

INNER VIEW

BENSON

DESIGN FIRM
Benson Cabinetry (Foshan) Co., Ltd.

This drawing is copyright
Contractors shall work from figured dimensions only
Contractors must check all dimensions on site
Contractors must be reported immediately to architects

Customer Signature

Project incharge signature

Approved by

Date:

A112 单-10 robinia st frankston/Wardrobe 2

BENSON

DESIGN FIRM
Benson Cabinetry (Foshan) Co., Ltd.

This drawing is copyright
Contractors shall work from figured dimensions only
Contractors must check all dimensions on site
Contractors must be reported immediately to architects

Customer Signature

Project incharge signature

Approved by

Date:

A112 单-10 robinia st frankston/Wardrobe 2

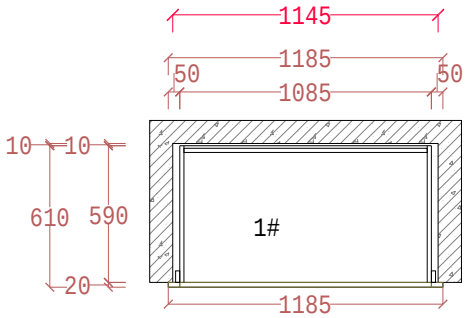

PLAN VIEW
floor

Material

Door1 : GM5028 林间小溪

Carcass1 :GM5028 林间小溪

Handle :木免拉

Toe Kick:同门板

DRW&HNG :Blum soft close 托底导轨

Led : 3000k 靠前100mm 配门控开关

顶封板拆单按100高

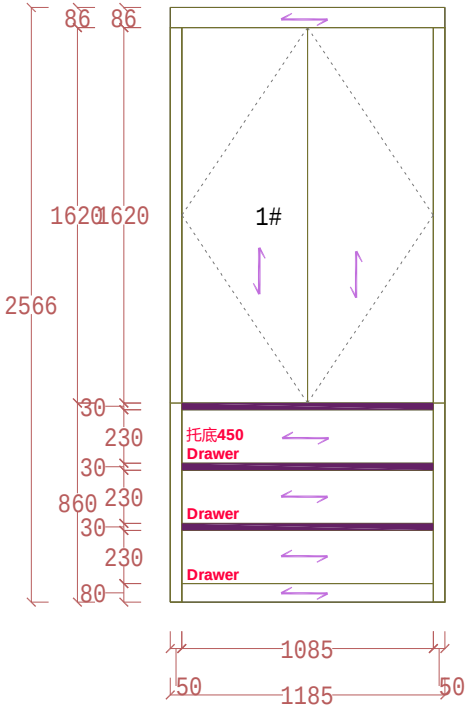

OUTSIDE VIEW

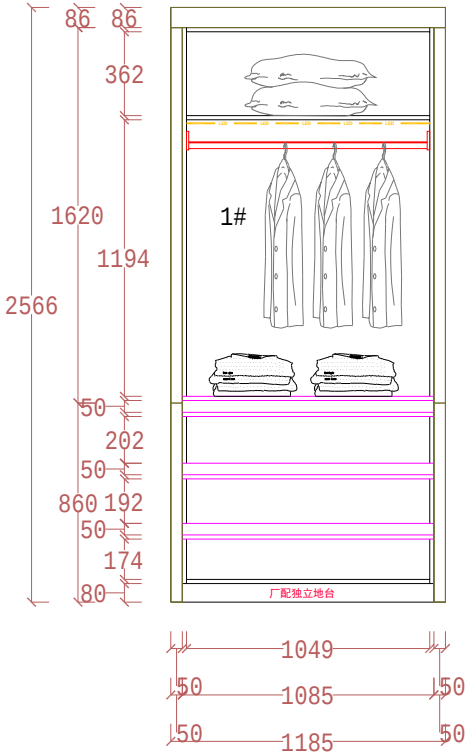

INNER VIEW

BENSON

DESIGN FIRM
Benson Cabinetry (Foshan) Co., Ltd.

This drawing is copyright
Contractors shall work from figured dimensions only
Contractors must check all dimensions on site
Contractors must be reported immediately to architects

Customer Signature

Project incharge signature

Approved by

Date: